INSTALLATION INSTRUCTIONS AND OWNER'S MANUAL

INNSBROOK FIREPLACE INSERT

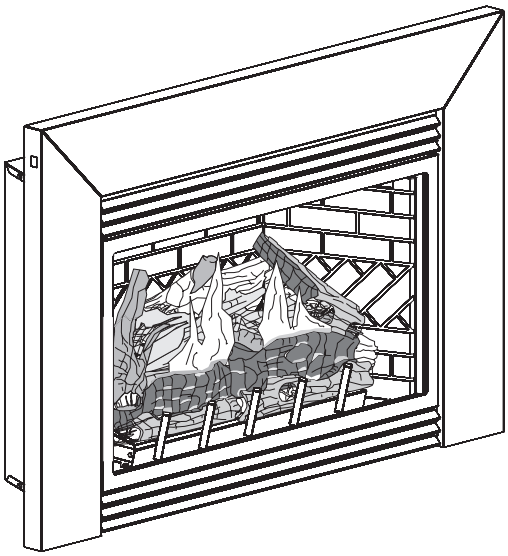

DIRECT VENT GAS FIREPLACE HEATER

MODEL SERIES

DV25IN33L(N,P)-1
DV33IN33L(N,P)-1
DV35IN33L(N,P)-1

GAS-FIRED
C UL US
LISTED

UL FILE NO. MH30033

Installer: Leave this manual with the appliance.
Consumer: Retain this manual for future reference.

NATIONAL FIREPLACE INSTITUTE
NFI
CERTIFIED
www.nficertified.org

We suggest that our gas hearth products be installed and serviced by professionals who are certified in the U.S. by the National Fireplace Institute® (NFI) as NFI Gas Specialists.

WARNING: If the information in these instructions are not followed exactly, a fire or explosion may result causing property damage, personal injury or loss of life.

— **Do not store or use gasoline or other flammable vapors and liquids in the vicinity of this or any other appliance.**

— **WHAT TO DO IF YOU SMELL GAS**
- **Do not try to light any appliance.**
- **Do not touch any electrical switch; do not use any phone in your building.**
- **Immediately call your gas supplier from a neighbor's phone. Follow the gas supplier's instructions.**
- **If you cannot reach your gas supplier, call the fire department.**

— **Installation and service must be performed by a qualified installer, service agency or the gas supplier.**

This appliance may be installed in an aftermarket, permanently located, manufactured home (USA only) or mobile home, where not prohibited by state or local codes.

This appliance is only for use with the type of gas indicated on the rating plate. This appliance is not convertible for use with other gases, unless a certified kit is used.

WARNING: If not installed, operated and maintained in accordance with the manufacturer's instructions, this product could expose you to substances in fuel or from fuel combustion which can cause death or serious illness.

TABLE OF CONTENTS

SECTION	PAGE
Important Safety Information	3
Safety Information for Users of LP Gas	4
Introduction	5
Specifications	6
Fireplace Insert Dimensions	7
Mantle and Trim Clearances	8
Gas Supply	9
Venting and Installation	10-12
Vertical Termination	13
Alternate ON/OFF Switch Installation	14
Surround Panel Installation	15
Blower Accessory Information	16
Log Placement	17
Operating Instructions	18
Standing Pilot Lighting Instructions	19
Standing Pilot Wiring	20
Standing Pilot Troubleshooting	21
Insert Maintenance and Service	22
Decorative Accessories	23
Insert Parts View	24
Insert Parts List	25
How to Order Repair Parts	26
Service Notes	26-27

IMPORTANT SAFETY INFORMATION

Before enclosing the vent pipe assembly, operate the appliance to ensure it is venting properly.

DO NOT OPERATE THIS APPLIANCE WITHOUT GLASS FRONT PANEL INSTALLED

- **Children and adults should be alerted to the hazards of high surface temperatures and should stay away to avoid burns or clothing ignition.**
- **Young children should be carefully supervised when they are in the same room as the appliance.**
- **Clothing or other flammable material should not be placed on or near the appliance.**
- **Adequate accessibility clearances for servicing and proper operation should be maintained.**
- **This appliance must not share or be connected to a flue serving a separate solid-fuel burning appliance.**
- **Keep the area around your appliance clear of combustible materials, gasoline and other flammable vapor and liquids.**
- **Under no circumstances should any solid fuels (wood, coal, paper or cardboard etc.) be used in this appliance.**
- **The flow of combustion and ventilation air must not be obstructed in any way.**

- **Due to high temperatures the appliance should be located out of traffic and away from furniture and draperies.**
- **The glass front or any part removed for servicing the appliance must be replaced prior to operating the appliance. Work should be done by a qualified service person.**
- **Keep burner and control compartment clean.**
- **Vent cap is hot while fireplace is in operation.**
- **Installation and repair should be done by a QUALIFIED SERVICE PERSON. The appliance should be inspected before use and at least annually by a qualified service person. More frequent cleaning may be required due to excessive lint from carpeting, bedding materials, etc. It is imperative that control compartments, burners and circulating air passageways of the appliance be kept clean.**
- **DO NOT put anything around the fireplace insert that will obstruct the flow of ventilation air.**
- **Maintain clearances in accordance with local installation codes and the requirements of the gas supplier.**
- **DO keep the appliance area clear and free from combustible material, gasoline and other flammable vapors and liquids.**
- **DO examine venting system periodically and replace damaged parts.**
- **DO make a periodic visual check of pilot and burners. Clean and replace damaged parts.**
- **CAUTION: The glass used in your fireplace insert is ceramic glass. If the glass is cracked or damaged in any way, it should be replaced only with a complete glass frame assembly from Empire. See parts list on Page 25 for ordering.**
- **DO NOT use this fireplace insert if any part has been under water. Immediately call a qualified service technician to inspect the heater and to replace any part of the control system and any gas control which has been under water.**
- **Any safety screen or guard removed for servicing an appliance must be replaced prior to operating the appliance.**

SAFETY INFORMATION FOR USERS OF LP GAS

Propane (LP-Gas) is a flammable gas which can cause fires and explosions. In its natural state, propane is odorless and colorless. You may not know all the following safety precautions which can protect both you and your family from an accident. Read them carefully now, then review them point by point with the members of your household. Someday when there may not be a minute to lose, everyone's safety will depend on knowing exactly what to do. If, after reading the following information, you feel you still need more information, please contact your gas supplier.

LP-GAS WARNING ODOR

If a gas leak happens, you should be able to smell the gas because of the odorant put in the LP-Gas. That's your signal to go into immediate action!

- Do not operate electric switches, light matches, use your phone. Do not do anything that could ignite the gas.
- Get everyone out of the building, vehicle, trailer, or area. Do that IMMEDIATELY.
- Close all gas tank or cylinder supply valves.
- LP-Gas is heavier than air and may settle in low areas such as basements. When you have reason to suspect a gas leak, keep out of basements and other low areas. Stay out until firefighters declare them to be safe.
- Use your neighbor's phone and call a trained LP-Gas service person and the fire department. Even though you may not continue to smell gas, do not turn on the gas again. Do not re-enter the building, vehicle, trailer, or area.
- **Finally**, let the service man and firefighters check for escaped gas. Have them air out the area before you return. Properly trained LP-Gas service people should repair the leak, then check and relight the gas appliance for you.

NO ODOR DETECTED - ODOR FADE

Some people cannot smell well. Some people cannot smell the odor of the chemical put into the gas. You must find out if you can smell the odorant in propane. Smoking can decrease your ability to smell. Being around an odor for a time can affect your sensitivity or ability to detect that odor. Sometimes other odors in the area mask the gas odor. People may not smell the gas odor or their minds are on something else. Thinking about smelling a gas odor can make it easier to smell.

The odorant in LP-Gas is colorless, and it can fade under some circumstances. For example, if there is an underground leak, the movement of the gas through soil can filter the odorant. Odorants in LP-Gas also are subject to oxidation. This fading can occur if there is rust inside the storage tank or in iron gas pipes.

The odorant in escaped gas can adsorb or absorb onto or into walls, masonry and other materials and fabrics in a room. That will take some of the odorant out of the gas, reducing its odor intensity.

LP-Gas may stratify in a closed area, and the odor intensity could vary at different levels. Since it is heavier than air, there may be more odor at lower levels. Always be sensitive to the slightest gas odor. If you detect any odor, treat it as a serious leak. Immediately go into action as instructed earlier.

SOME POINTS TO REMEMBER

- **Learn to recognize the odor of LP-Gas.** Your local LP-Gas Dealer can give you a "Scratch and Sniff" pamphlet. Use it to find out what the propane odor smells like. If you suspect that your LP-Gas has a weak or abnormal odor, call your LP-Gas Dealer.
- If you are not qualified, do not light pilot lights, perform service, or make adjustments to appliances on the LP-Gas system. If you are qualified, consciously think about the odor of LP-Gas prior to and while lighting pilot lights or performing service or making adjustments.
- Sometimes a basement or a closed-up house has a musty smell that can cover up the LP-Gas odor. Do not try to light pilot lights, perform service, or make adjustments in an area where the conditions are such that you may not detect the odor if there has been a leak of LP-Gas.
- Odor fade, due to oxidation by rust or adsorption on walls of new cylinders and tanks, is possible. Therefore, people should be particularly alert and careful when new tanks or cylinders are placed in service. Odor fade can occur in new tanks, or reinstalled old tanks, if they are filled and allowed to set too long before refilling. Cylinders and tanks which have been out of service for a time may develop internal rust which will cause odor fade. If such conditions are suspected to exist, a periodic sniff test of the gas is advisable. **If you have any question about the gas odor, call your LP-Gas dealer. A periodic sniff test of the LP-Gas is a good safety measure under any condition.**
- If, at any time, you do not smell the LP-Gas odorant and you think you should, assume you have a leak. Then take the same immediate action recommended above for the occasion when you do detect the odorized LP-Gas.
- If you experience a complete "gas out," (the container is under no vapor pressure), turn the tank valve off immediately. If the container valve is left on, the container may draw in some air through openings such as pilot light orifices. If this occurs, some new internal rusting could occur. If the valve is left open, then treat the container as a new tank. Always be sure your container is under vapor pressure by turning it off at the container before it goes completely empty or having it refilled before it is completely empty.

INTRODUCTION

Instructions to Installer

1. Installer must leave instruction manual with owner after installation.
2. Installer must have owner fill out and mail warranty card supplied with the fireplace.
3. Installer should show owner how to start and operate the fireplace.

This direct vent gas fireplace heater is designed to operate with all combustion air being siphoned from the outside of the building and all exhaust gases expelled to the outside of the building. The information contained in this manual pertains to all models and gas control systems unless otherwise noted.

Warning: This unit is not for use with solid fuels.

Appliance Certification

This fireplace is design certified in accordance with American National Standard/CSA Standard ANSI Z.21-88/CSA 2.33 and by Underwriters Laboratories as a Direct Vent Gas Fireplace Heater and shall be installed according to these instructions.

Consult your local building code agency, prior to installation, to ensure compliance with local codes-including permits and inspections.

The fireplace insert, when installed, must be electrically grounded in accordance with local codes or, in absence of local codes, with the *National Electric Code ANSI/NFPA 70* or Canadian Electric code, CSA C22.1, if an external electrical source is utilized.

These models may be installed in a bedroom or bed-sitting room in the U.S.A. and Canada.

Qualified Installing Agency

Installation and replacement of gas piping, gas utilization equipment or accessories and repair and servicing of equipment shall be performed only by a qualified agency. The term "qualified agency" means any individual, firm, corporation or company which either in person or through a representative is engaged in and is responsible for (a) the installation or replacement of gas piping or (b) the connection, installation, repair or servicing of equipment, who is experienced in such work, familiar with all precautions required and has complied with all the requirements of the authority having jurisdiction.

State of Massachusetts: The installation must be made by a licensed plumber or gas fitter in the Commonwealth of Massachusetts.

The installation must conform with local codes or, in the absence of local codes, with the *National Fuel Gas Code ANSI Z223.1/NFPA 54* Natural Gas and Propane Installation Code, or CSA B149.1 in Canada.* **Available from the American National Standards Institute, Inc. 11 West 42nd St., New York, N.Y. 10036.*

Warning: ANY CHANGE TO THIS FIREPLACE OR ITS CONTROLS CAN BE DANGEROUS.
Improper installation or use of the fireplace can cause serious injury or death from fire, burns, explosions, or carbon monoxide poisoning.

Any alteration of the original design, installed other than as shown in these instructions or use with a type of gas not shown on the rating plate is the responsibility of the person and company making the change.

Important

All correspondence should refer to complete Model Number, Serial Number and type of gas.

High Altitude

When installing this unit at an elevation above 2000 feet (in the United States) it may be necessary to decrease the input rating by changing the existing burner orifice to a smaller size. Generally, input should be reduced 4 percent for each 1000 feet above sea level. However, if the heating value of the gas has been reduced, this general rule may not apply. Check with local gas utility for proper orifice size identification.

Canadian High Altitude

Altitude: 0-4500 feet (0-1370 m)

When installing this unit at an elevation above 4500 feet (in Canada), check with local authorities.

Consult your local gas utility for assistance in determining the proper orifice for location.

Preparation

This direct vent gas fireplace insert and its components are tested and safe when installed in accordance with this Installation Manual. Report to your dealer any parts damaged in shipment, specifically check glass condition. Do not install unit with damaged, incomplete, or substitute parts. Read all instructions before starting installation and follow these instructions carefully during installation to insure maximum benefit and safety. Failure to follow them will void your warranty and may present a fire hazard.

The warranty will be voided by, and the warranter disclaims any responsibility for the following actions:

- Installation of any damaged fireplace insert or vent system component.
- Modification of the fireplace insert or direct vent system.
- Installation other than as instructed by Empire Comfort Systems, Inc.
- Improper positioning of the logs or glass door assembly.
- Installation and/or use of any component part not manufactured or approved by manufacturer.

SPECIFICATIONS

DV25IN33L MODELS	LP	Nat
Input Btu/hr Maximum	25,000	25,000
Btu/hr Minimum	17,000	17,000
KWH (Maximum)	7.30	7.30
(Minimum)	5.00	5.00
Orifice	#53 (0.0596)	#42 (0.0935)
Air Shutter Opening	Full Open	1/8”
DV33IN33L MODELS	**LP**	**Nat**
Input Btu/hr Maximum	33,000	33,000
Btu/hr Minimum	25,000	25,000
KWH (Maximum)	9.57	9.57
(Minimum)	7.30	6.67
Orifice	1.65 mm	#34 (0.111)
Air Shutter Opening	Full Open	3/16”
DV35IN33L MODELS	**LP**	**Nat**
Input Btu/hr Maximum	35,000	35,000
Minimum	27,000	25,000
KWH (Maximum)	10.15	10.15
(Minimum)	7.83	7.30
Orifice	#51 (0.067)	#33 (0.113)
Air Shutter Opening	Full Open	3/16”

Remote Control Accessories	Description
FRBC	Millivolt Battery Remote ON/OFF
FRBTC	Millivolt Battery Remote Thermostat
TMV	Millivolt WIRELESS Wall Thermostat
TRW	Millivolt Reed Switch Wall Thermostat

Surround Kits	Description
Contemporary	
S256BL	6” Wide, black for use on DV25IN models
S336BL	6” Wide, black for use on DV33IN models
S356BL	6” Wide, black for use on DV35IN models
Traditional Cast Iron	
SC256BL	6” Wide, black for use on DV25IN models
SC336BL	6” Wide, black for use on DV33IN models
SC356BL	6” Wide, black for use on DV35IN models

Venting Kits	Description	Contents
DVKI	Vertical Vent Kit - 17 1/2’	One piece of 35’ FlexVent (split for 17 1/2’ vent run), Round Cap, Flashing, connectors, and clamps. Recommended when installing to an existing round fireplace chimney pipe.
DVVK3FV	Vertical Vent Kit - 25’	Two pieces of 25’ FlexVent, Rectangle Cap, Flashing, connectors, and clamps Recommended when installing to a square or rectangular clay flue.
DVK35	Vent Extension Kit	35’ flex vent extension section with 2 connectors and 4 clamps

Note: When installing vent caps, special locally made flashings may be required to properly seal the vent system to the existing chimney termination.

FIREPLACE INSERT DIMENSIONS

When planning a fireplace insert installation, it's necessary to determine:

- The vent system configuration to be used.
- Gas supply piping.
- Whether optional accessories - devices such as a wall switch or remote control - are desired.
- Electrical supply requirements for blower.
- Proper opening size of fireplace required for installation of the fireplace insert.

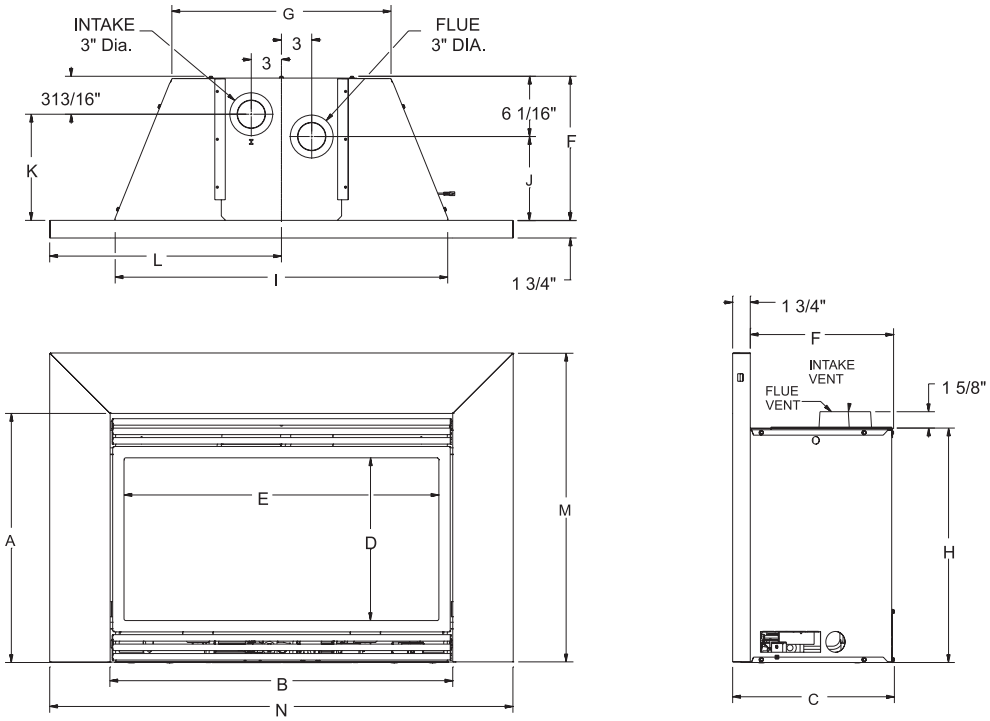

DV FIREPLACE INSERT DIMENSIONS														
MODEL	A	B	C	D	E	F	G	H	I	J	K	L	M	N
DV25IN	19 3/4"	28	14 1/2"	11 1/8"	25 1/4"	12 3/4"	17"	18 5/16"	27"	6 3/4"	9"	20"	25 5/8"	40"
DV33IN	22 3/4"	31	16	14 1/8"	28 1/4"	14 1/4"	18 3/4"	21 5/16"	30"	8 1/4"	10 1/2"	21 1/2"	28 5/8"	43"
DV35IN	24 3/4"	34	16	16 1/8"	31 1/4"	14 1/4"	21 3/4"	23 5/16"	33"	8 1/4"	10 1/2"	23"	30 5/8"	46"

Figure 1

Fireplace Opening Dimensional Information/Sizing				
MINIMUM FIREPLACE OPENING DIMENSIONS				
MODEL NO.	HEIGHT A*	FRONT WIDTH B	DEPTH C	REAR WIDTH D
DV25IN	18 3/8"	27 1/2"	12 3/4"	17 1/4"
DV33IN	21 3/8"	30 1/2"	14 1/4"	19"
DV35IN	23 3/8"	33 1/2"	14 1/4"	22"

***Note:** If the fireplace lintel is wider than 8" (203mm), the height of the fireplace opening must be increased a few inches to allow for a gradual offset in the exhaust and/or intake vent pipes.

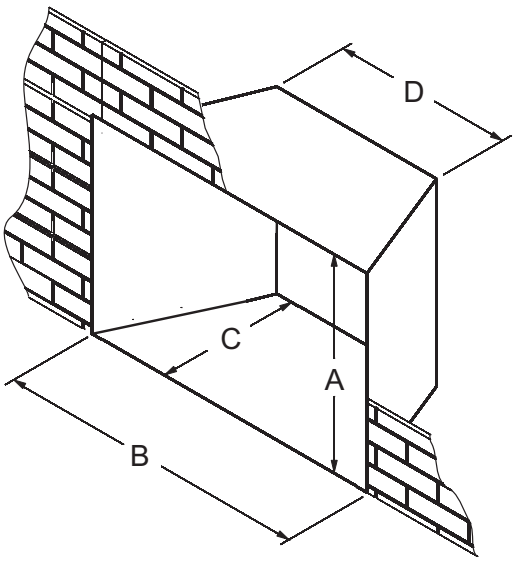

Figure 2

MANTLE AND TRIM CLEARANCES

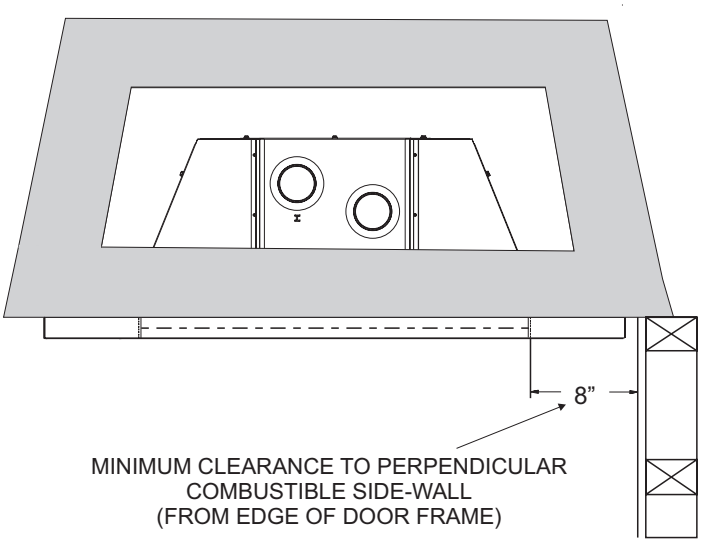

Figure 3

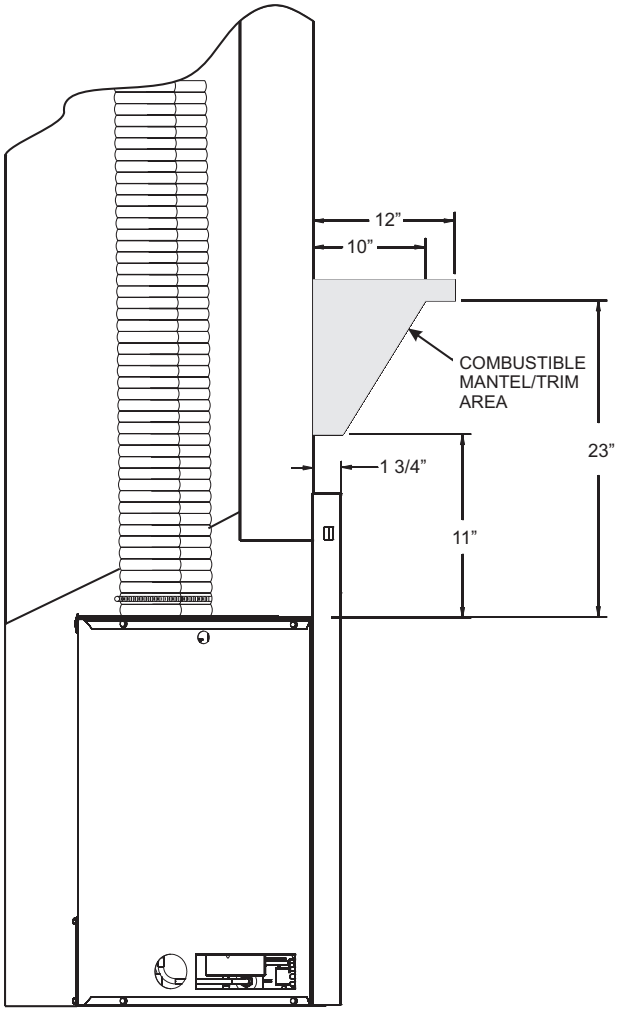

Figure 4

Combustible Material
No greeting cards, stockings or ornamentation of any type should be placed on or attached to the fireplace. The flow of heat can ignite combustibles.

GAS SUPPLY

The gas pipeline can be brought in through the right or left side of the appliance. The insert has a Flexline with shutoff valve located on the right side when facing the unit. **See Figures 5 and 6.** Consult the current National Fuel Gas Code, ANSI Z223.1 CAN/CGA-B149 (.1 or .2) installation code.

Recommended Gas Pipe Diameter				
Pipe Length	**Schedule 40 Pipe Inside Diameter**		**Tubing, Type L Outside Diameter**	
	Nat.	L.P.	Nat.	L.P.
0-10ft 0-3m	1/2" 12.7mm	3/8" 9.5mm	1/2" 12.7mm	3/8" 9.5mm
11-40ft 4-12m	1/2" 12.7mm	1/2" 12.7mm	5/8" 15.9mm	1/2" 12.7mm
41-100ft 13-30m	1/2" 12.7mm	1/2" 12.7mm	3/4" 19mm	1/2" 12.7mm
101-150ft 31-46m	3/4" 19mm	1/2" 12.7mm	7/8" 22.2mm	3/4" 1.9 mm

Note: Never use plastic pipe. Check to confirm whether your local codes allow copper tubing or galvanized.
Note: Since some municipalities have additional local codes, it is always best to consult your local authority and installation code.

The use of the following gas connectors is recommended:

— ANS Z21.24 Appliance Connectors of Corrugated Metal Tubing and Fittings.

— ANS Z21.45 Assembled Flexible Appliance Connectors of Other Than All-Metal Construction

The above connectors may be used if acceptable by the authority having jurisdiction. The state of Massachusetts requires that a flexible appliance connector cannot exceed three feet in length.

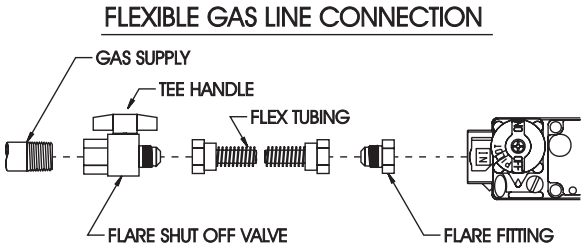

Figure 5

	Gas Supply Pressure (inches w.c.)		
	Minimum	Normal	Maximum
Natural Gas	4.5"	7.0"	14.0"
LP (Propane)	10.8"	11.0"	14.0"
	Manifold Pressure (inches w.c.)		
	Normal (HI)		
Natural Gas	3.5"		
LP (Propane)	10.0"		

Installing the Main Gas Cock

Each appliance should have its own manual gas cock.

A manual main gas cock should be located in the vicinity of the unit. Where none exists, or where its size or location is not adequate, contact your local authorized installer for installation or relocation.

Compounds used on threaded joints of gas piping shall be resistant to the action of liquefied petroleum gases. The gas lines must be checked for leaks by the installer. This should be done with a soap solution watching for bubbles on all exposed connections, and if unexposed, a pressure test should be made.

Never use an exposed flame to check for leaks. Appliance must be disconnected from piping at inlet of control valve and pipe capped or plugged for pressure test. Never pressure test with appliance connected; control valve will sustain damage!

NOTE: The millivolt gas controls are equipped with a captured screw type pressure test point, therefore it is not necessary to provide a 1/8" test point up stream of the control.

When using copper or flex connector use only approved fittings.

The appliance and it's individual shut off valve must be disconnected from supply piping system during any pressure testing of that system at test pressures in excess of 1/2 psig (3.5kPa).

The appliance must be isolated from the gas supply piping system by closing its individual manual shut off valve during any pressure testing of the gas supply piping system at test pressures equal to or less than 1/2 psig (3.5kPa).

Attention! If one of the procedures results in pressures in excess of 1/2 psig (14" w.c.) (3.5 kPa) on the fireplace gas valve, it will result in a hazardous condition.

Checking Manifold Pressures

Both Propane and Natural gas valves have a built-in pressure regulator in the gas valve. Natural gas models will have a manifold pressure of approximately 3.5" w.c. (.871kPa) at the valve outlet with the inlet pressure to the valve from a minimum of 4.5" w.c. (1.120kPa) for the purpose of input adjustment to a maximum of 14.0" w.c. (3.484kPa). Propane gas models will have a manifold pressure approximately 10.0" w.c. (2.49kPa) at the valve outlet with the inlet pressure to the valve from a minimum of 10.8" w.c. (2.68kPa) for the purpose of input adjustment to a maximum of 14.0" w.c. (3.484kPa).

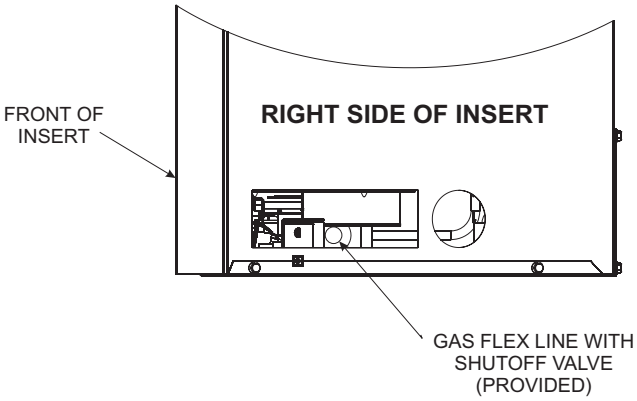

Figure 6

VENTING AND INSTALLATION

1. Before beginning, remove glass door and log package from unit. Also check to make sure there is no hidden damage to the unit. Take a minute and plan out the gas, venting and electrical route. It is best to start with the gas line first, followed by the chimney liner and electrical supply requirements.
2. Minimum fireplace opening requirements are shown in **Figure 2** of this installation manual. The firebrick (refractory), glass doors, screen rails, screen mesh and log grates can be removed from a factory built fireplace in order to gain minimum gas insert opening requirements prior to installing the gas fireplace insert.
3. This insert requires no hearth extensions. Combustible material on the floor may be installed up to the insert. Do not obstruct the lower louver of the insert. The original fireplace cannot be returned to solid fuel in this condition.
4. The metal floor of the solid fuel firebox may be removed to facilitate the installation of the insert. CLEARANCE TO COMBUSTIBLE MATERIAL UNDER THE INSERT IS 1/4". YOU MUST USE THE LEVELING LEGS TO RAISE THE INSERT A MINIMUM OF 1/4" IF THE INSERT IS TO SIT ON COMBUSTIBLE MATERIAL. The side walls and top structure of the firebox may not be altered with the exception of removable baffles and dampers. Smoke shields, shelves and baffles may be removed if attached with mechanical fasteners. The original fireplace cannot be returned to solid fuel in this condition.
5. Combustible facing material may be installed over the original combustible facing material on the solid fuel fireplace. The original specified clearances of a factory-built fireplace must be maintained, with the exception of the hearth. Clearances on a masonry fireplace must be maintained at 12" from the opening for combustible projections over 1 1/2". Clearances for combustible projections under 1 1/2" must be maintained at 6" from the opening per NFPA211. Plan the surround size accordingly. A surround must be used with the insert. UNDER NO CIRCUMSTANCE CAN COMBUSTIBLE MATERIAL BE PLACED BEHIND THE SURROUND!
6. The insert surround is tested and approved with this gas insert and may cover existing air circulation vents or grills on the solid fuel fireplace it is installed into. If the surround does not cover the entire ventilation grill surface, the exposed grill area should be left open.

NOTE: Surround panel kits have been tested and approved to cover existing air circulation vents or grills.

NOTE: Cutting of sheet metal parts of a fireplace in order to install the fireplace insert is prohibited.

WARNING: Only the surround as supplied may be used to cover integral grills on the solid fuel-burning fireplace. No other components such as shrouds, sheet metal plates, etc. may be used to seal off vents.

7. To assure top performance, safety and efficiency, inserts must be installed with an approved flue liner as per CAN/CGA B-149 or National Fuel Code ANSI Z223 and these instructions.

Note: The following statement is also provided on a separate label plate in the instruction packet. Prior to installation of the fireplace insert, the installer must mechanically secure this warning plate to the inside of the fireplace for future reference as required.

WARNING: The solid fuel fireplace has been converted for use with gas only and cannot be used for burning wood or solid fuels unless all original parts have been replaced and the fireplace has been reapproved by the authority having jurisdiction.

8. The solid fuel fireplaces' flue damper must be fully locked in the open position or removed for installation of the gas fireplace insert.
9. The fireplace and fireplace chimney must be cleaned and in good working order and constructed of noncombustible materials.
10. Make sure that all chimney cleanouts fit properly so air cannot leak into the chimney.
11. Install the insert without the surround panels attached and make all gas, venting, and electrical connections.

If the factory built fireplace does not have gas access holes provided, an access hole of 1 1/2" diameter (37.5mm) or less may be drilled through the lower sides or bottom of the firebox in a proper workmanship like manner. This access hole must be plugged with a non-combustible insulation after the gas supply line has been installed.

12. To complete the installation, install surround panel assembly. Please refer to instructions included with the surround panel kit.

Ensure there are no obstructions to side air passages of decorative trim once installed on insert.

INSTALLING THE VENT SYSTEM

Vent System Installation Precautions

Before starting installation of vent kits, the installer should read these instructions and the Vent Kit Instructions to ensure that a proper vent installation is completed. Consult your local Building Codes before beginning the Installation.

WARNING: THIS GAS INSERT AND VENT ASSEMBLY MUST BE VENTED DIRECTLY TO THE OUTSIDE AND MUST NEVER BE ATTACHED TO A CHIMNEY SERVING A SEPARATE SOLID FUEL BURNING APPLIANCE. EACH GAS APPLIANCE MUST USE A SEPARATE VENT SYSTEM. COMMON VENT SYSTEMS ARE PROHIBITED.

VENTING AND INSTALLATION

Vent System Approvals

Figure 8 shows the vent termination caps and systems approved for use with these models. Approved vent system terminations are labeled for identification. 3-inch diameter listed flexible aluminum or stainless steel gas vent is used for both the incoming combustion air and exhaust vent pipes. NO OTHER VENTING SYSTEMS OR COMPONENTS MAY BE USED. Detailed installation instructions are included with each vent termination kit and should be used in conjunction with this manual.

Horizontal Venting

The vent system on this model **CANNOT** be terminated horizontally.

Vertical Venting

The inlet and exhaust vent pipes **MUST** be connected to the proper collars on the unit **AND** to the termination cap or the unit will not operate. The intake vent collar is identified by a stamped "I" on the top collar sliding vent plate assembly.

WARNING: MAJOR U.S. BUILDING CODES SPECIFY MINIMUM CHIMNEY AND/OR VENT HEIGHT ABOVE THE ROOF TOP. THESE MINIMUM HEIGHTS ARE NECESSARY IN THE INTEREST OF SAFETY. SEE FIGURES 8 THROUGH 10 FOR MINIMUM HEIGHTS, PROVIDED THE TERMINATION CAP IS AT LEAST 2-FEET FROM A VERTICAL WALL AND 2-FEET BELOW A HORIZONTAL OVERHANG.

Note: This also pertains to vertical vent systems installed on the outside of the building.

WARNING: THE EXHAUST PIPE MUST ONLY BE CONNECTED TO THE EXHAUST STARTING COLLAR OF THE UNIT AND TO THE EXHAUST COLLAR OF THE TERMINATION CAP.

THE INLET AIR PIPE MUST ONLY BE CONNECTED TO THE INLET AIR STARTING COLLAR OF THE UNIT AND TO THE INLET AIR COLLAR OF THE TERMINATION CAP. BOTH THE INLET VENT AND THE FLUE VENT MUST BE CONNECTED FROM THE INSERT TO THE VENT TERMINATION CAP.

NOTE: The minimum vertical vent rise is 10 feet and the maximum vertical vent rise is 35 feet. These dimensions are measured from the starting collars of the unit to the end of the last section of vent pipe. **See Figure 8.**

NOTE: The damper of the masonry chimney may need to be removed to allow installation of the flexible-vent pipe.

When installing into a zero clearance, factory built wood-burning fireplaces, the use of the DVKI Round Vertical Termination Kit should allow you to mount the vent adaptor and cap to the exposed round chimney pipe easily.

Connecting the Vent Pipe

Caution: Sharp edges. Always use gloves when installing.

Install the 3-inch flexible vent pipes down through the chimney.

Attach the pipe-to-cap adaptor to the termination cap and the top of the flexible vent pipe, then install the cap to the top of the chimney.

Remove the vent slide plate assembly from the top of the insert. **See Figure 7.** Trim off excess venting then attach and secure the bottom ends of the flex pipes to the starting collars with the adjustable band clamps provided. Slide the gas insert into place, and position any excess flex vent pipe back up into the chimney. Begin installation of the insert into the fireplace opening. Align the vent slide plate assembly with the guides located on top of the insert. Work the insert inch by inch into the fireplace cavity as you pull forward on the vent slide plate assembly. Do not use excessive force on the vent slide plate. Once the vent slide plate is close to seating, install the vent bolt through the center hole of the insert top flange, and into the vent slide plate nut. Using a wrench or socket, tighten the bolt until the vent slide plate is seated forward completely.

Positioning, Leveling, and Securing Insert

1. Place the insert into position.

Note: The front flanges of the insert (without surround panels) should be set at approximately 1"(inch) in front of the face of the fireplace.

2. Level the insert from side to side and front to back.
3. If necessary, use the leveling bolts included in the instruction pack. Screw the legs into the nuts installed in the bottom of the insert. Turn legs in until insert is level.

CAUTION: TO AVOID DOWNDRAFTS AND/OR COLD AIR PROBLEMS, IT IS RECOMMENDED TO SEAL OFF THE AREA BETWEEN THE TERMINATION CAP AND THE TOP OF THE SOLID-FUEL CHIMNEY OPENING INTO WHICH THE VENT CAP HAS BEEN INSTALLED.

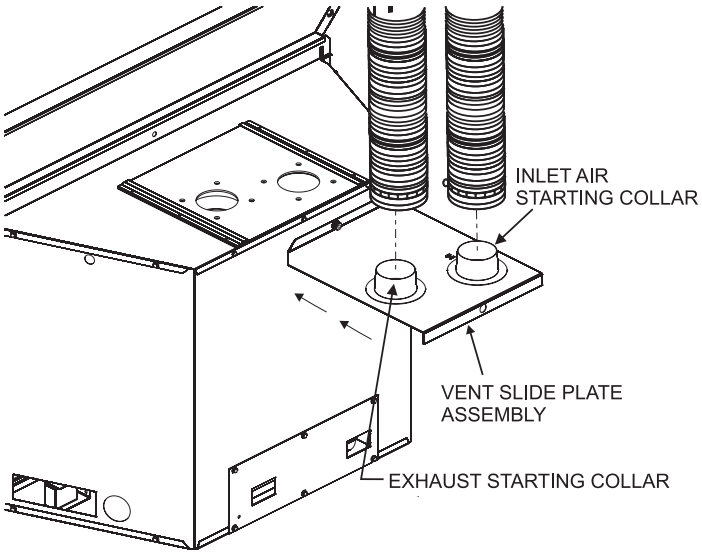

Figure 7

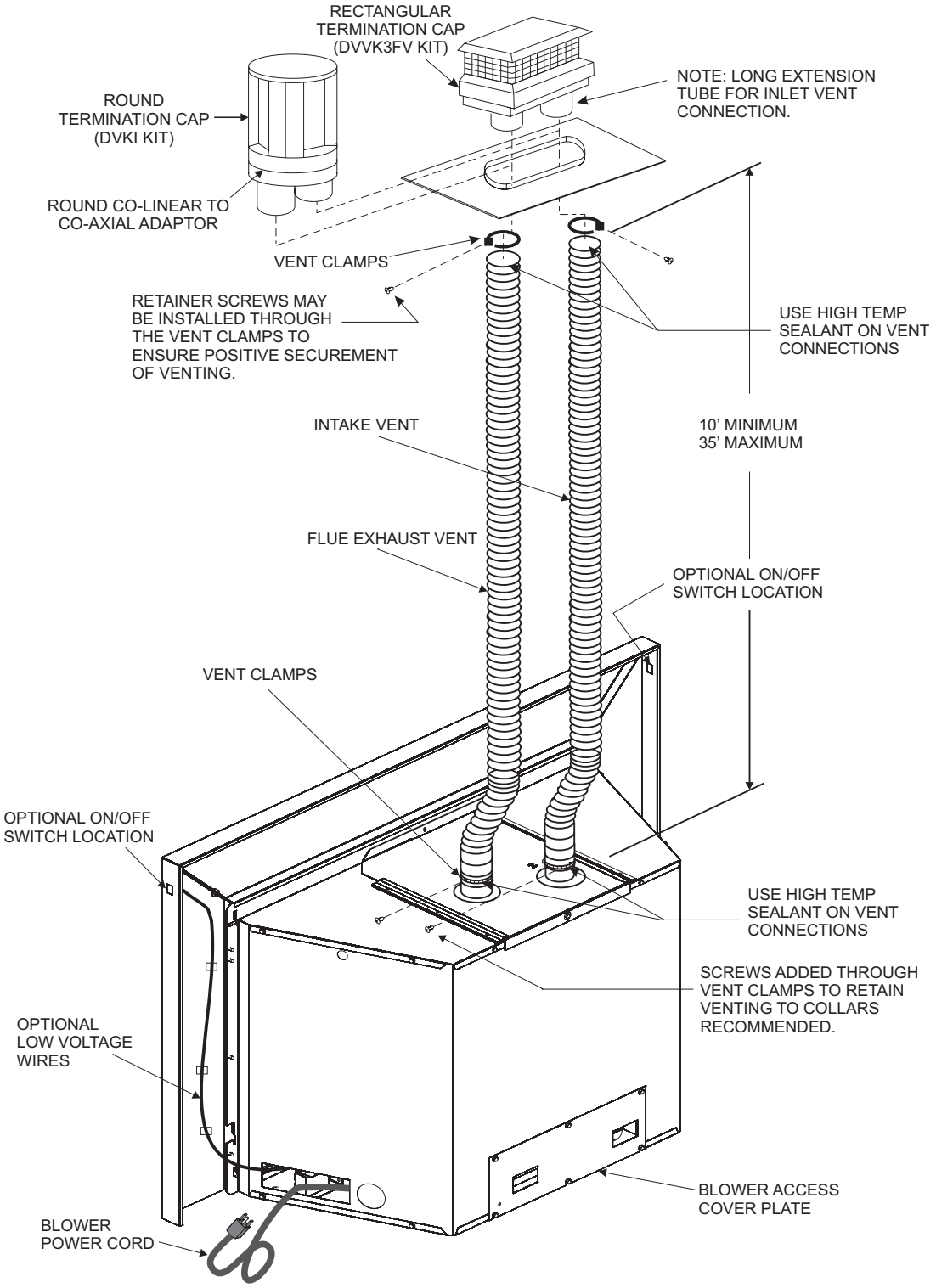
RECTANGULAR
TERMINATION CAP
(DVVK3FV KIT)
NOTE: LONG EXTENSION
TUBE FOR INLET VENT
CONNECTION.
ROUND
TERMINATION CAP
(DVKI KIT)
ROUND CO-LINEAR TO
CO-AXIAL ADAPTOR
VENT CLAMPS
RETAINER SCREWS MAY
BE INSTALLED THROUGH
THE VENT CLAMPS TO
ENSURE POSITIVE SECUREMENT
OF VENTING.
USE HIGH TEMP
SEALANT ON VENT
CONNECTIONS
INTAKE VENT
10' MINIMUM
35' MAXIMUM
FLUE EXHAUST VENT
OPTIONAL ON/OFF
SWITCH LOCATION
VENT CLAMPS
OPTIONAL ON/OFF
SWITCH LOCATION
USE HIGH TEMP
SEALANT ON VENT
CONNECTIONS
SCREWS ADDED THROUGH
VENT CLAMPS TO RETAIN
VENTING TO COLLARS
RECOMMENDED.
OPTIONAL
LOW VOLTAGE
WIRES
BLOWER ACCESS
COVER PLATE
BLOWER
POWER CORD

Figure 8

VERTICAL TERMINATION

Determining Minimum Vent Height Above the Roof.

WARNING: Major U.S. building codes specify minimum chimney and/or vent height above the roof top. These minimum heights are necessary in the interest of safety. These specifications are summarized in Figure 9.

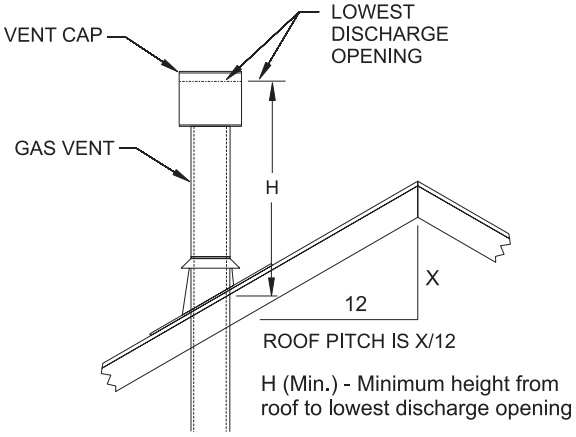

ROOF PITCH	H (Min.)
Flat to 6/12	12" (305 mm)
6/12 to 7/12	15" (381 mm)
Over 7/12 to 8/12	18" (457 mm)
Over 8/12 to 16/12	24" (610 mm)
Over 16/12 to 21/12	36" (914 mm)

Figure 9

Note that for steep roof pitches, the vent height must be increased. In high wind conditions, nearby trees, adjoining roof lines, steep pitched roofs, and other similar factors can result in poor draft, or down-drafting. In these cases, increasing the vent height may solve this problem.

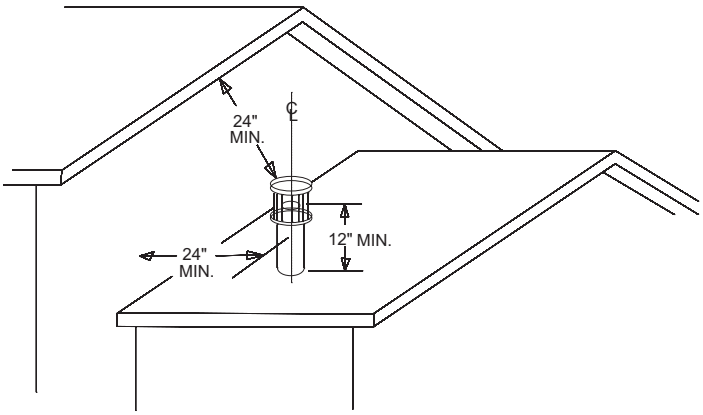

Figure 10

When terminating the vent cap near an exterior wall or overhang, maintain minimum clearances as shown in **Figure 10.**

Vertical Through the Roof Applications

The Gas Fireplace Insert has been approved for:

a) Vertical installations up to 35 feet in height (top of insert to cap).
b) Two sets of 45 degree elbow offsets (bends in flexvent) within the vertical installation. From 0 to a maximum of 8 ft. of vent pipe can be used between elbows.
c) Wall straps must be used to support offset pipe every 4'.

This application will require that you first determine the roof pitch and use the appropriate venting components.

General Maintenance

Conduct an inspection of the venting system semi-annually. Recommended areas to inspect are as follows:

1. Check areas of the venting system which are exposed to the elements for corrosion. These will appear as rust spots or streaks and, in extreme cases, holes. These components should immediately be replaced.
2. Remove the cap and shine a flashlight down the vent. Remove any bird nests or other foreign material.
3. Check for evidence of excessive condensate, such as water droplets forming in the flex venting and subsequently dripping out at joints or seams. Condensate can cause corrosion of caps, pipe and fittings. It may be caused by having excessive lateral runs, or having exterior portions of the system exposed to cold weather.
4. Inspect joints to verify that no pipe sections or fittings have been disturbed and, consequently, loosened. Also, check mechanical supports, such as wall straps or plumbers' tape for rigidity.

ALTERNATE ON/OFF SWITCH INSTALLATION

WIRING THE FIREPLACE

Note: Electrical wiring must be installed by a licensed electrician.

CAUTION: DISCONNECT REMOTE CONTROLS IF YOU ARE ABSENT FOR EXTENDED TIME PERIODS. THIS WILL PREVENT ACCIDENTAL FIREPLACE OPERATION.

Installation of Alternate Surround Panel ON/OFF Switch

An ON/OFF switch and wire assembly are provided. They are included in the instruction packet.
Do not cut wire or insulation on metal edges.
Note: Refer to surround panel installation section on page 15 for additional information on attachment.

Contemporary Surrounds

1. Find the coiled low voltage wire assembly and ON/OFF switch located in the instruction packet.
2. Attach the flag terminal ends to the "TH/TP" and "TH" terminals on the front terminal block of the gas valve. **See Figure 13.**
3. Run the low voltage alternate switch wires up the back of the right or left surround panel. Then secure the wires with wire clips provided. **See Figure 11.**

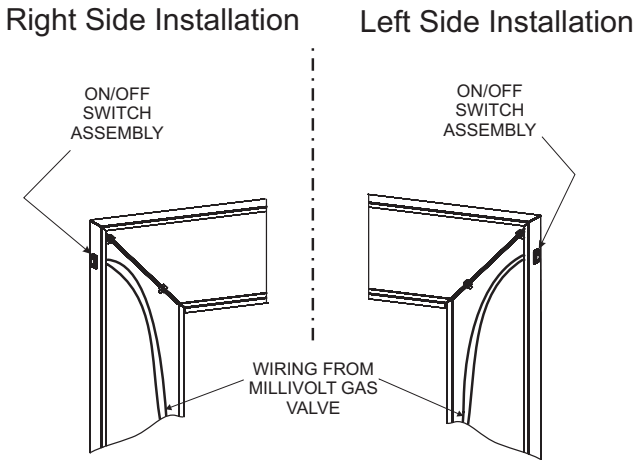

Figure 11
Insert ON/OFF switch into side panel then attach wire assembly from valve terminals.

4. Remove the switch knockout on the side surround panel, then install the ON/OFF switch.
5. Connect the low voltage wires from the gas valve to the ON/OFF switch.
6. Attach the surround panel assembly to the insert. Place the surround panel assembly against the face of the insert and align the lower retaining tabs with the notches on the insert sides. Lift the surround panel assembly slightly until the bottom return flange (top panel) is positioned over the top flange on the insert. This secures the surround panel assembly to the insert without screws.

Traditional Cast Iron Surrounds

1. Find the coiled low voltage wire assembly and ON/OFF switch located in the instruction packet.
2. Attach the flag terminal ends to the "TH/TP" and "TH" terminals on the front terminal block of the gas valve. **See Figure 13.**

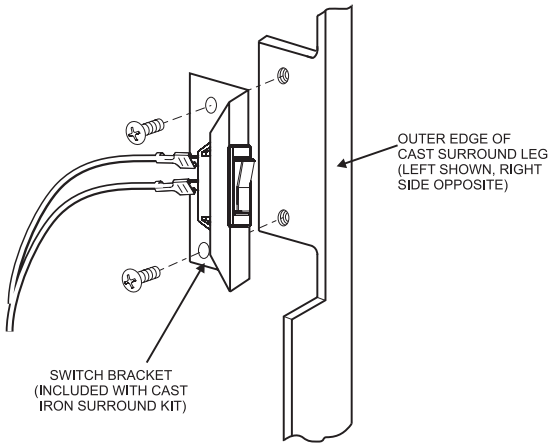

Figure 12

Note: For right side leg installation, reverse switch position in bracket.

3. Run the low voltage alternate switch wires up the back of the right or left cast surround leg. Then secure them with the wire clips provided.
4. Install the switch bracket with screws as shown in **Figure 12** to the back of the cast surround leg.
5. Install ON/OFF switch, and connect low-voltage wires from gas valve.
6. Attach cast surround panel assembly to the insert. Place the cast surround assembly against the face of the insert and align the lower retaining tabs with the notches on the insert sides. Lift the cast surround assembly slightly until the bottom return flange (top panel) is positioned over the top flange on the insert. This secures the cast surround assembly to the insert without screws.

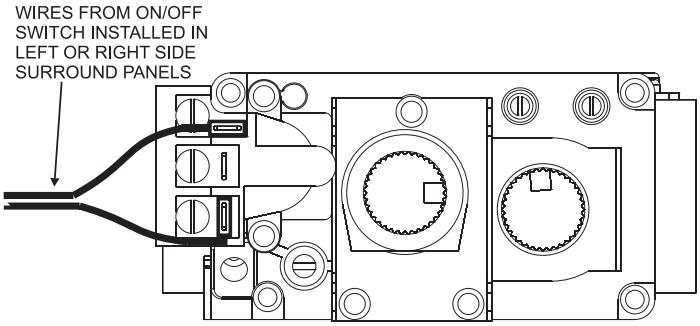

NOTE: TO OPERATE INSERT WITH SIDE PANEL ON/OFF SWITCH, BE SURE TO PLACE THE MAIN SWITCH (TO THE RIGHT SIDE OF GAS VALVE) TO "**OFF**" POSITION.

Figure 13

SURROUND PANEL INSTALLATION

INSTALLING THE TRIM SURROUNDS

Combustible materials MUST NEVER overlap onto the front face.

WARNING: WHEN FINISHING THE FIREPLACE INSERT, NEVER OBSTRUCT OR MODIFY THE AIR INLET/OUTLET LOUVERS ON THE FIREPLACE INSERT IN ANY MANNER.

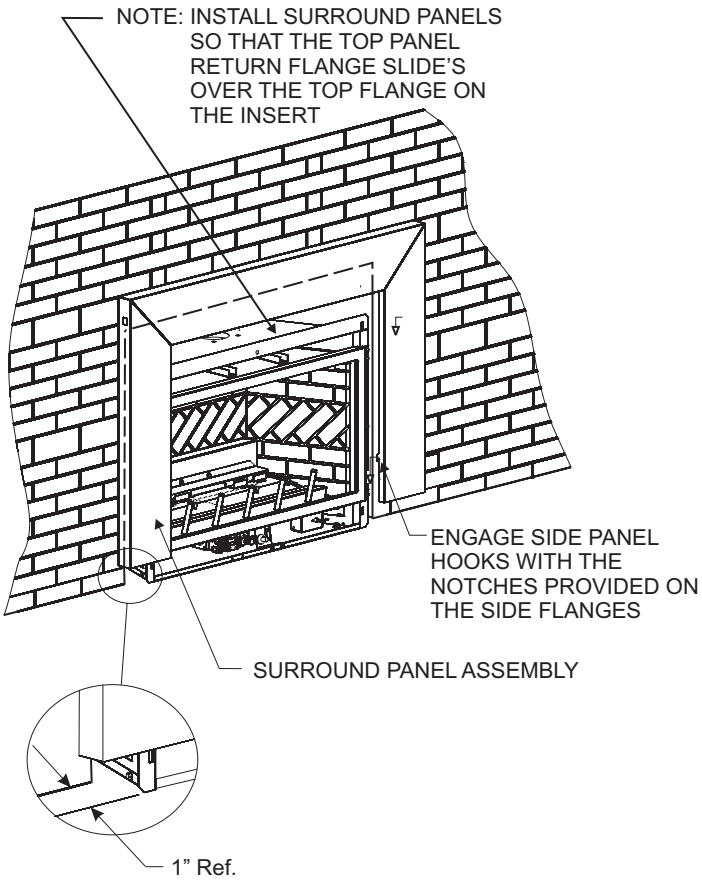

Figure 14

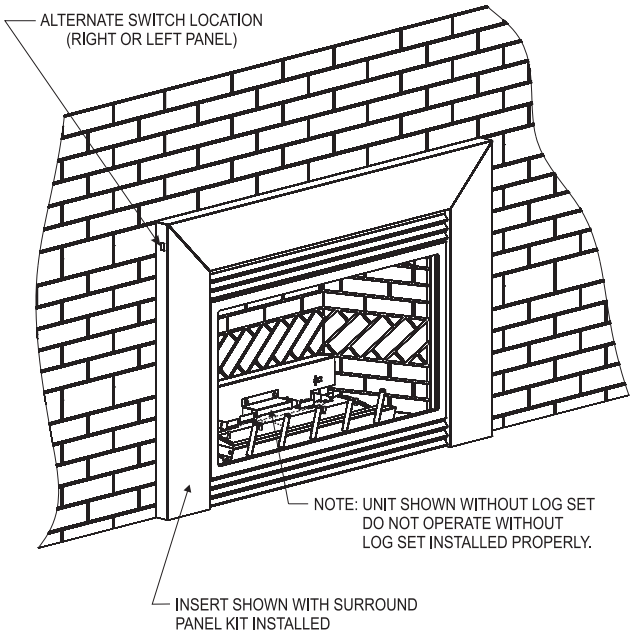

Figure 15

BLOWER ACCESSORY INFORMATION

The appliance, when installed must be electrically connected and grounded in accordance with local codes or, in the absence of local codes, with the current CSA C22.1 Canadian Electrical Code.

U.S. Installations, follow local codes and the National Electrical Code, ANSI/NFPA No. 70.

Should this blower require servicing, the power supply must be disconnected. For rewiring of any replacement components, refer to Figures 16 and 17 and the parts list on page 25.

BLOWER ACCESSORY

Operation

The fireplace insert is equipped with a factory installed blower accessory that includes a fan control switch, plus a rheostat (speed control).

The speed control knob is located behind the lower louver at the right side of the insert.

From a cold start, the temperature activated fan control switch will normally take 5-10 minutes to heat up and energize the blower.

Once the blower is energized, adjust the blower speed control as desired, then replace the lower louver.

When the insert is shut off, it may take 30-40 minutes for the heated unit to dissipate (cool down) enough for the blower to shut off automatically.

Note: The blower shut off times will vary on blower speed and BTU input level setting control by adjustment of the HI/LO knob located on the gas valve.

Blower removal instructions

Servicing or removal of the blower system must be performed by a qualified service person.

If the blower assembly (Item 45, page 24) must be replaced, the following steps are recommended for removal:

1. Turn off gas and disconnect the electrical supply.
2. Remove the glass door assembly.
3. Remove the log set.
4. Remove the front surround panel assembly by lifting upward and outward to detach.
5. Remove the 5/16” x 2-1/2” center bolt that retains the Vent Slide plate assembly.
6. Remove the insert from the fireplace cavity by pulling forward on the insert, and at the same time, sliding the vent plate rearward until disengaged.
7. As the insert is moved outward, the gas line may need to be disconnected at the insert shut off valve. If so, make sure the main gas line is shut off that supplies gas to the insert.
8. Once the insert is pulled out, the blower assembly can be removed by locating the (6) screws on the lower back of the insert that retains the blower base plate.
9. When the screws are removed, gently pull the blower assembly outward.
10. Disconnect the two ¼” wire terminals from the motor.
11. Remove the (4) screws that retain the blower assembly to the base plate, and set blower aside.
12. Install the replacement blower, and re-install the insert by reversing above steps.

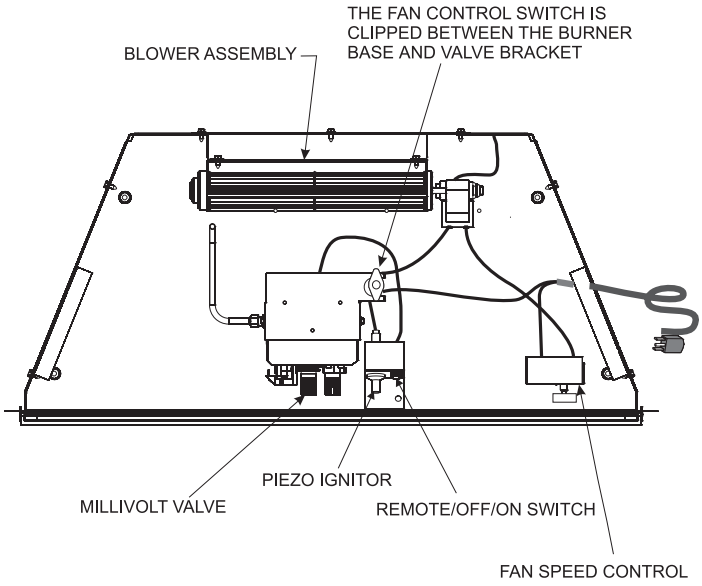

Figure 16

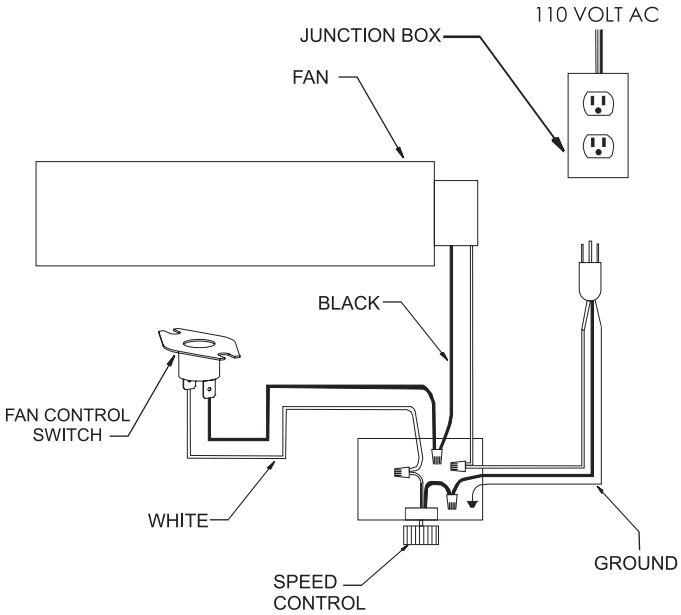

Figure 17

LOG PLACEMENT

Before you begin: This fireplace insert is supplied with a set of seven ceramic fiber logs. Do not handle these logs with your bare hands. Always wear gloves to prevent skin irritation from ceramic fibers. After handling logs, wash your hands gently with soap and water to remove any traces of fiber.

The positioning of logs is critical to safe and clean operation of this fireplace. Sooting and other problems may result if the logs are not properly and firmly positioned in the fireplace. Refer to **Figure 18** and **Figure 19** and corresponding WARNING when completing following log placement steps.

1. Remove top louver, grasp louver, lift and pull forward.
2. Lower bottom louver, lift and hinge forward.
3. Release two glass frame spring clamps at bottom of the glass door assembly.
4. Swing the bottom of the glass door outward approximately 10-15 degrees, then grasping the edges, gently lift upward to remove the door assembly, and set aside.
5. Remove the foam packaging that contains the log set from inside the firebox.
6. Carefully unpack the logs and twigs. Spread them out for easy identification.
7. Begin with the front left and front right logs. Place these so that they are centered left to right on the front log support ledge. The flat bottoms will rest on top of the front log support ledge, and they must be position all the way forward and touching the back of the grate tangs. Important: The front right log has a small knot as shown in Figure 18.
8. Next install the large rear log. It will be centered left to right and placed all the way to the back of the firebox, on top of the rear log support. Note: DV25IN models incorporate two small tabs in the rear log support that keep the back log positioned correctly. DV33IN models have one small tab in the rear log support to ensure the back log is in the correct position. The DV35IN models will have two tabs bent forward in the rear log support to ensure proper left to right positioning of the log, plus one small tab near the center that keeps the back log from shifting forward.
9. Locate the center left log. It will have two locator pin holes on the bottom flat surface. Align the two holes with the two left pins on the burner assembly. Make sure this log is not raised up off of the burner. The flat bottom surface must be completely resting flat on the top of the burner surface.
10. Install the center right log. It will also have two locator pin holes on the bottom flat surface. Align these two holes with the two right pins on the burner assembly. Make sure this log is not raised up off of the burner. The flat bottom surface must be completely resting flat on the top of the burner surface.
11. Add the right twig by placing the locator pin hole on the bottom of the twig with the pin on top of the center right log. The tip of the right twig will rest on top of the rear log near the right end.
12. Add the left twig by placing the locator pin hole on the bottom of the twig with the pin on top of the center left log. The long branch of the left twig will rest in a small groove on top of the rear log. This groove is near the left end of the rear log.

Note: Decorative Rock is not included with the Fireplace Insert, however it may be purchased separately and placed only on the firebox floor.
Do Not place decorative rock or rock wool on the logs or burner assembly.

13. Replace the glass door assembly onto the fireplace insert.
14. Secure the glass door with the two spring clamps located under the firebox.
15. Re-install the upper and lower louver assemblies by aligning the end tabs with the slots provided in the outer face flanges of the insert.

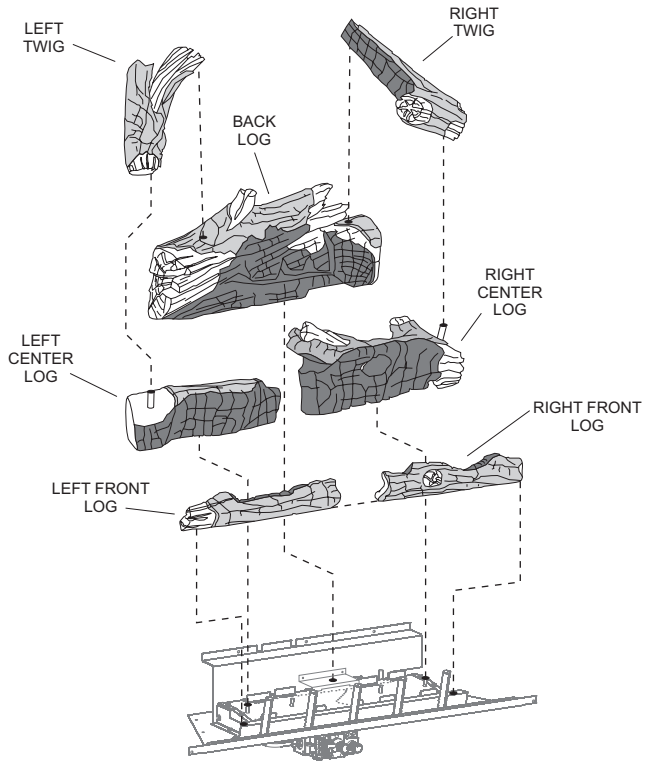

Figure 18

Warning: Failure to position the parts in accordance with this diagram or failure to use only parts specifically approved with this appliance may result in property damage or personal injury.

Figure 19

Note: Center the front two logs on the front log support ledge. Then make sure they are positioned all the way forward and touching the back edges of the grate tang uprights. The bottom of the two front logs are flat and must sit on top of the front log support ledge.

OPERATING INSTRUCTIONS

750 Millivolt System

The standing pilot (750 millivolt system) is a continuous burning pilot. The pilot remains ON even when the main burner is OFF.

When you ignite the pilot, the thermopile produces millivolts (electrical current) which energizes the magnet in the gas valve. After 30 seconds to 1 minute time period you can release the gas control knob and the pilot will stay ON. Allow your pilot flame to operate an additional one (1) to two (2) minutes before you turn the gas control knob from the PILOT position to the ON position. This time period allows the millivolts (electrical current) to build-up to a sufficient level allowing the gas control to operate properly.

1. Follow the SAFETY and LIGHTING INSTRUCTIONS for standing pilot controls found in this manual and on labels found in control compartment behind the door assembly.

CAUTION: During the initial purging and subsequent lightings, never allow the gas valve control knob to remain depressed in the "pilot" position without pushing the piezo ignitor button at least once every second.

2. During the operating season, leave the control valve knob in the "ON" position. This will allow the pilot flame to remain lit. Turn the burner flame on or off with the fireplace REMOTE/OFF/ON switch, wall switch or remote controls.

NOTE: The gas control valve allows you to increase or decrease the height of the main burner flame. The control valve has a pressure regulator with a knob as shown in **Figure 20**. Rotate the knob clockwise to "HI" to increase the flame height and counterclockwise to "LO" to decrease the flame height.

3. When the operating season is over, turn the REMOTE/OFF/ON switch to "OFF" and the control valve to "OFF". The system, including the pilot light, will be shut down.

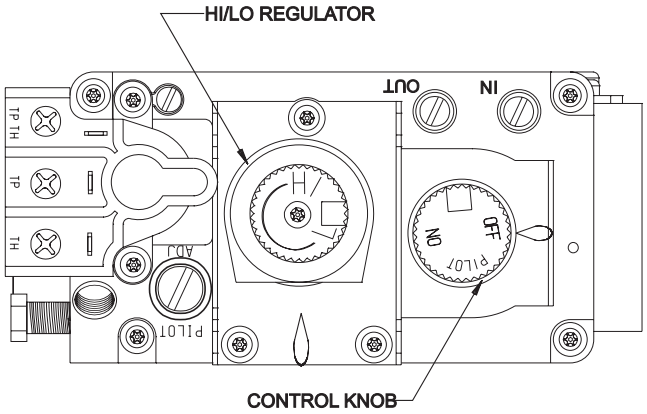

Figure 20

The OWNER should carefully read and follow these operating instructions at all times. Lower the door assembly to view the gas controls for the fireplace.

Initial Lighting

Upon completing the gas line or turning the gas valve on after it has been in the "OFF" position, a small amount of air will be in the lines. When first lighting the fireplace, it will take a few minutes for the lines to purge themselves of this air. Once the purging is complete, the fireplace will light and operate satisfactorily.

Subsequent lightings of the appliance will not require such purging if the gas valve is not turned to "OFF."

Pilot Flame (Figure 21)

The thermopile/thermocouple (standing pilot) tips should be covered with flame.

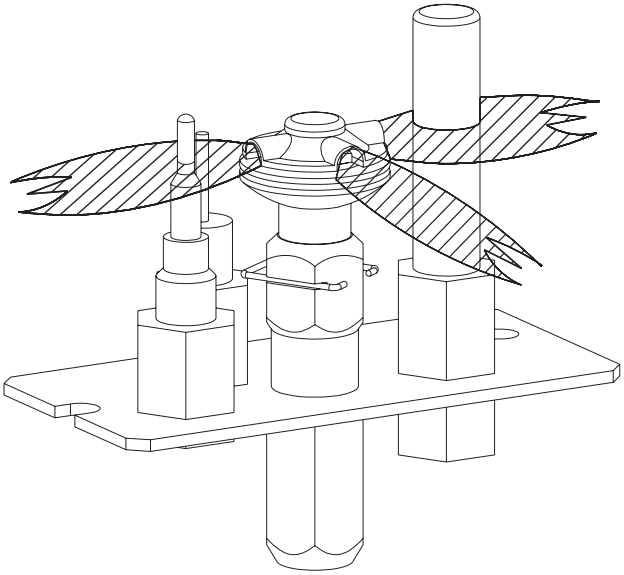

Figure 21

STANDING PILOT LIGHTING INSTRUCTIONS

FOR YOUR SAFETY READ BEFORE LIGHTING

WARNING: If you do not follow these instructions exactly, a fire or explosion may result causing property damage, personal injury or loss of life.

A. This appliance has a pilot which must be lighted by hand. When lighting the pilot, follow these instructions exactly.

B. Before lighting smell all around the appliance area for gas. Be sure to smell next to the floor because some gas is heavier than air and will settle on the floor.

What To Do If You Smell Gas

- Do not try to light any appliance.
- Do not touch any electrical switch;
- Do not use any phone in your building.
- Immediately call your gas supplier from a neighbor's phone. Follow the gas supplier's instructions.
- If you cannot reach your gas supplier, call the fire department.

C. Use only your hand to push in or turn the gas control knob. Never use tools. If the knob will not push in or turn by hand, don't try to repair it; call a qualified service technician. Force or attempted repair may result in a fire or explosion.

D. Do not use this appliance if any part has been under water. Immediately call a qualified service technician to inspect the appliance and to replace any part of the control system and any gas control which has been under water.

LIGHTING INSTRUCTIONS

1. Stop! Read the safety information above.
2. Set REMOTE/OFF/ON switch to OFF.
3. Turn off all electric power to the appliance (if applicable).
4. Lower bottom louver assembly.
5. Push in gas control knob slightly and turn clockwise to "OFF."

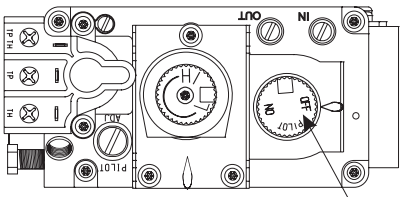

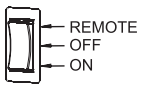

Note: Knob cannot be turned from "PILOT" to "OFF" unless knob is pushed in slightly. Do not force.

6. Wait ten (10) minutes to clear out any gas. Then smell for gas, including near the floor. If you then smell gas, STOP! Follow "B" in the safety information above. If you do not smell gas, go to the next step.
7. Find pilot - Follow metal tube from gas control. The pilot is behind the burner on the right side.
8. Turn gas control knob counterclockwise to "PILOT."

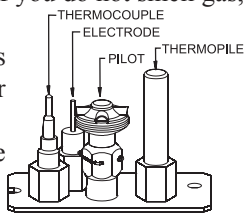

9. Push in control knob all the way and hold in. Repeatedly push the piezo ignitor button until the pilot is lit. Continue to hold the control knob in the for about one (1) minute after the pilot is lit. Release knob, and it will pop back up. Pilot should remain lit. If it goes out, repeat steps 5 through 9.
   - If the control knob does not pop up when released, STOP and IMMEDIATELY call a qualified service technician or gas supplier.
   - If the pilot will not stay lit after several tries, turn the gas control knob to "OFF" and call your service technician or gas supplier.
10. Turn gas control knob counterclockwise to "ON."
11. Close bottom louver assembly.
12. Turn on all electric power to the appliance (if applicable).
13. Set REMOTE/OFF/ON switch to desired setting.

TO TURN OFF GAS TO FIREPLACE

1. Set REMOTE/OFF/ON switch to OFF.
2. Turn off all electric power to the appliance if service is to be performed (if applicable).
3. Lower bottom louver assembly.
4. Push in gas control knob slightly and turn clockwise to "OFF." Do not force.
5. Close bottom louver assembly.

STANDING PILOT WIRING

For Standing Pilot Ignition Wiring

Appliance Requirements

WARNING: DO NOT CONNECT 110-120 VAC TO THE GAS CONTROL VALVE OR THE APPLIANCE WILL MALFUNCTION AND THE VALVE WILL BE DESTROYED.

Optional Wall Switch

Position the wall switch in the desired position on a wall. Run a maximum of 25 feet (7.8m) or less length of 18 A.W.G. minimum wire and connect it to the fireplace valve pigtails.

WARNING: DO NOT CONNECT THE 110-120 VAC TO THE WALL SWITCH OR THE CONTROL VALVE WILL BE DESTROYED.

CAUTION: LABEL ALL WIRES PRIOR TO DISCONNECTION WHEN SERVICING CONTROL. WIRING ERRORS CAN CAUSE IMPROPER AND DANGEROUS OPERATION. VERIFY PROPER OPERATION AFTER SERVICING.

STANDING PILOT WIRING DIAGRAM

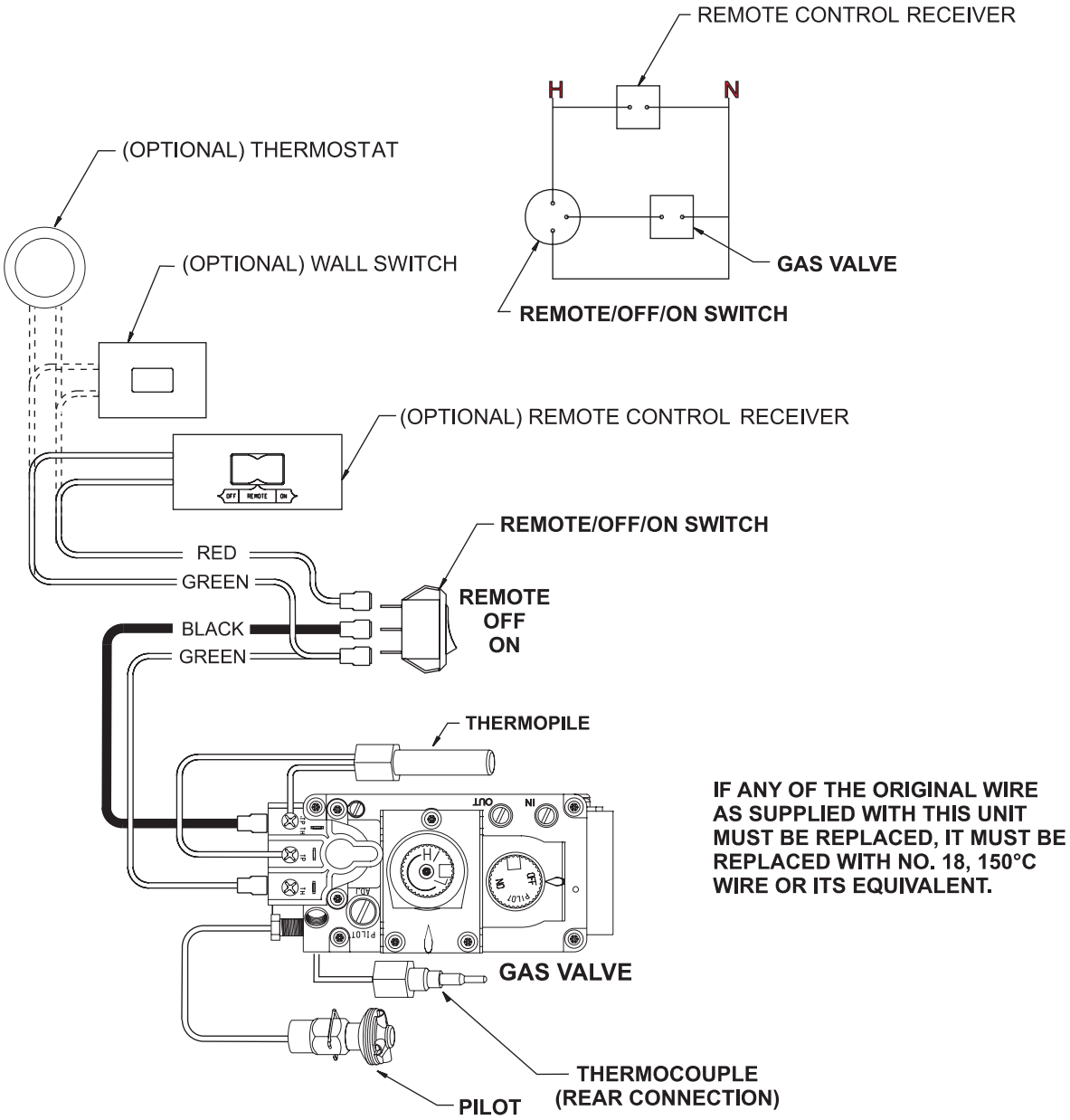

STANDING PILOT TROUBLESHOOTING

With proper installation and maintenance, your new Direct Vent Gas Fireplace will provide years of trouble-free service. If you do experience a problem, refer to the Trouble Shooting Guide below. This guide will assist a qualified service person in the diagnosis of problems and the corrective action to be taken.

1. **Spark ignitor will not light pilot after repeated triggering of piezo ignitor button.**
   a. Defective ignitor (no spark electrode)
   —Check for spark at electrode and pilot; if no spark and electrode wire is properly connected, replace ignitor.
   b. No gas or low gas pressure.
   —Check remote shut off valves from fireplace. Usually there is a valve near the main. There can be more than one (1) valve between the fireplace and main.
   —Low pressure can be caused by a variety of situations such as a bent line, too narrow diameter of pipe, or low line pressure. Consult with plumber or gas supplier.
   c. No LP in tank.
   —Check LP (propane) tank. Refill tank.
2. **Pilot will not stay lit after carefully following lighting instructions.**
   a. Defective thermocouple.
   —Check that pilot flame impinges on thermocouple. Clean and/or adjust pilot for maximum flame impingement.
   —Ensure the thermocouple connection at the gas valve is fully inserted and tight (hand tight plus 1/4 turn). Faulty thermocouple if reading is below specified minimum of 15 millivolts.
   —Disconnect the thermocouple from the valve, place one millivolt meter lead wire on the end of the thermocouple and the other millivolt meter lead wire on the thermocouple copper wire. Start the pilot and hold the valve knob in. If the millivolt reading is less than 15 millivolt, replace the thermocouple.
   b. Defective valve.
   —If thermocouple is producing more than 15 millivolts, replace faulty valve.
3. **Pilot burning, no gas to burner, valve knob "ON", REMOTE/OFF/ON switch "ON."**
   a. REMOTE/OFF/ON switch, wall switch, remote control or wires defective.
   —Check REMOTE/OFF/ON switch and wires for proper connections. Place jumper wires across terminal at switch. If burner comes on, replace defective switch. If OK, place jumper wires across switch wires at gas valve-if burner comes on, wires are faulty or connections are bad.
   b. Thermopile may not be generating sufficient millivolts.
   —If the pilot flame is not close enough physically to the thermopile, adjust the pilot flame.
   —Be sure the wire connections from the thermopile at the gas valve terminals are tight and the thermopile is fully inserted into the pilot bracket.
   —Check the thermopile with a millivolt meter. Take the reading at TH-TP & TP terminals of the gas valve. The meter should read 350 millivolts minimum, while holding the valve knob depressed in the PILOT position, with the pilot lit, and the REMOTE/OFF/ON switch in the OFF position. Replace the faulty thermopile if the reading is below the specified minimum.
   —With the pilot in the ON position, disconnect the thermopile leads from the valve. Take a reading at the thermopile leads. The reading should be 350 millivolts minimum. Replace the thermopile if the reading is below the minimum.
   c. Defective valve.
   —Turn valve knob to ON. Place REMOTE/OFF/ON switch to ON. Check with millivolt meter at thermopile terminals. Millivolt meter should read greater than 200 millivolts. If the reading is okay and the main burner does not ignite, replace the gas valve.
   d. Plugged main burner orifice.
   —Check main burner orifice for blockage and remove.
4. **Frequent pilot outage problem.**
   a. Pilot flame may be too high or too low, or blowing (high), causing pilot safety to drop out.
   —Clean and adjust flame for maximum flame impingement on the thermocouple. Follow lighting instructions carefully.
5. **The pilot and main burner extinguish while in operation.**
   a. No LP (Propane) in tank.
   Check LP (Propane) tank. Refill fuel tank.
   b. Inner vent pipe leaking exhaust gases back into system.
   —Check for leaks.
   c. Glass too loose, gasket leaks in corners after usage.
   —Be certain glass assembly is installed correctly.
   d. Horizontal vent improperly pitched.
   —The horizontal vent cap should slope down only enough to prevent any water from entering the unit. The maximum downwards slope is 1/4 inch.
   e. Bad thermopile or thermocouple.
   —Replace if necessary.
   f. Improper vent cap installation.
   —Check for proper installation and freedom from debris or blockage.
6. **Glass soots, and/or soot deposits collected on logs.**
   a. Flame impingement on logs incorrect.
   —Check and adjust log position. See Page 17. Contact Empire Comfort Systems, Inc.
   b. Debris around throat of main burner.
   —Inspect the opening at the base of the main burner. It is imperative that NO material be placed in this opening.
7. **Flame burns blue and lifts off main burner.**
   a. Insufficient oxygen being supplied.
   —Check to make sure vent cap is installed properly and free of debris. Make sure that vent system joints are tight and have no leaks.
   —Check to make sure that no material has been placed at the main burner base.

INSERT MAINTENANCE AND SERVICE

Although the frequency of servicing and maintenance will depend on use and the type of installation, you should have a qualified service technician perform an appliance checkup at the beginning of each heating season. Specific guidelines regarding each appliance maintenance task are listed below.

IMPORTANT: TURN OFF THE GAS BEFORE SERVICING YOUR APPLIANCE.

Cleaning Burner and Controls
Frequency: Once annually.
By: Qualified service technician.
Task: Brush or vacuum the control compartment, fireplace logs and burner areas surrounding the logs.

Checking Flame Patterns, Flame Height
Frequency: Periodically.
By: Qualified service technician/Home owner.
Task: Make a visual check of your fireplace's flame patterns.
Make sure the flames are steady - not lifting or floating. The thermopile/thermocouple (standing pilot) tips should be covered with flame. **See Figure 21.**

Checking Vent System
Frequency: Before initial use and at least annually thereafter, more frequently if possible.
By: Qualified service technician/Home owner.
Task: Inspect the external vent cap on a regular basis to ensure that no debris is interfering with the flow of air. Inspect entire vent system for proper function.

Cleaning Logs
Use a soft brush attachment on a vacuum cleaner to gently remove dust or soot deposits from logs and burner.

Cleaning Glass Door
Frequency: After the first 3 to 4 hours of use. As necessary after initial cleaning.
By: Home owner.
Task: Remove and clean glass after the first 3 to 4 hours of use. After the initial cleaning, clean as necessary. Film deposits on the inside of the glass door should be cleaned off using a household glass cleaner.
NOTE: DO NOT handle or attempt to clean the door when it is hot and DO NOT use abrasive cleaners.

Glass Door Replacement
Do not operate the fireplace insert if the high-temperature ceramic glass is cracked or broken.
Do not attempt to replace the ceramic glass panel. A complete replacement glass door assembly should be ordered as listed in the Parts List on page 25, if needed.
Do not use substitute materials for replacement of glass door components.
Do not abuse the glass door by striking the glass.
Do not abuse the glass door by slamming or forcing the door shut.
When installing the glass door assembly, place the top door flange over the firebox top, center left to right, then gently swing the door bottom inward and secure with the two (2) spring loaded door latches.

DECORATIVE ACCESSORIES

The following accessory parts can be obtained from your Empire Comfort Systems dealer. If you need additional information beyond what your dealer can furnish, contact Empire Comfort Systems Inc., Nine Eighteen Freeburg Ave., Belleville, Illinois 62220.

Decorative Mission Louver

- Black
- Gold Finish
- Hammered Pewter
- Brushed Stainless

Decorative Arch Louver

- Black
- Gold Finish
- Hammered Pewter
- Brushed Stainless

Decorative Leaf Louver

- Black
- Gold Finish
- Hammered Pewter
- Brushed Stainless

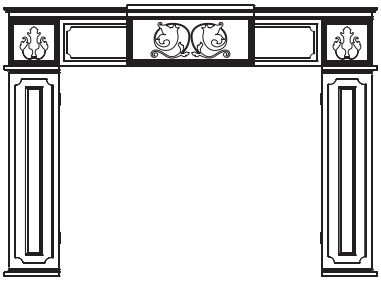

Cast Iron Traditional Surround

- Black

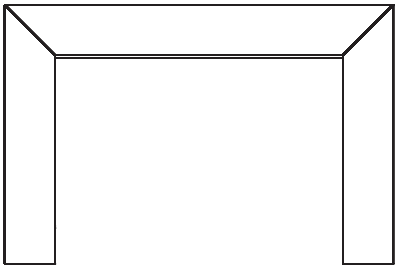

STD Contemporary Surround

- Black

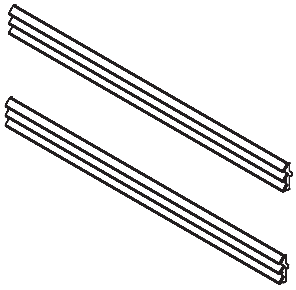

STD Louvers 45 Deg

- Black (Standard)
- Gold Finish
- Hammered Pewter
- Brushed Stainless

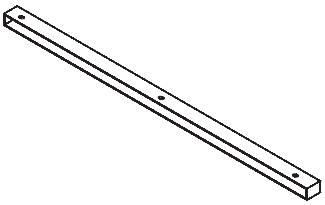

Bottom Cover

- Black

Used to finish off bottom of insert and surround panels when installed in a fireplace without a flush hearth extension. Can be used with traditional cast iron or contemporary surround kits.

INSERT PARTS VIEW

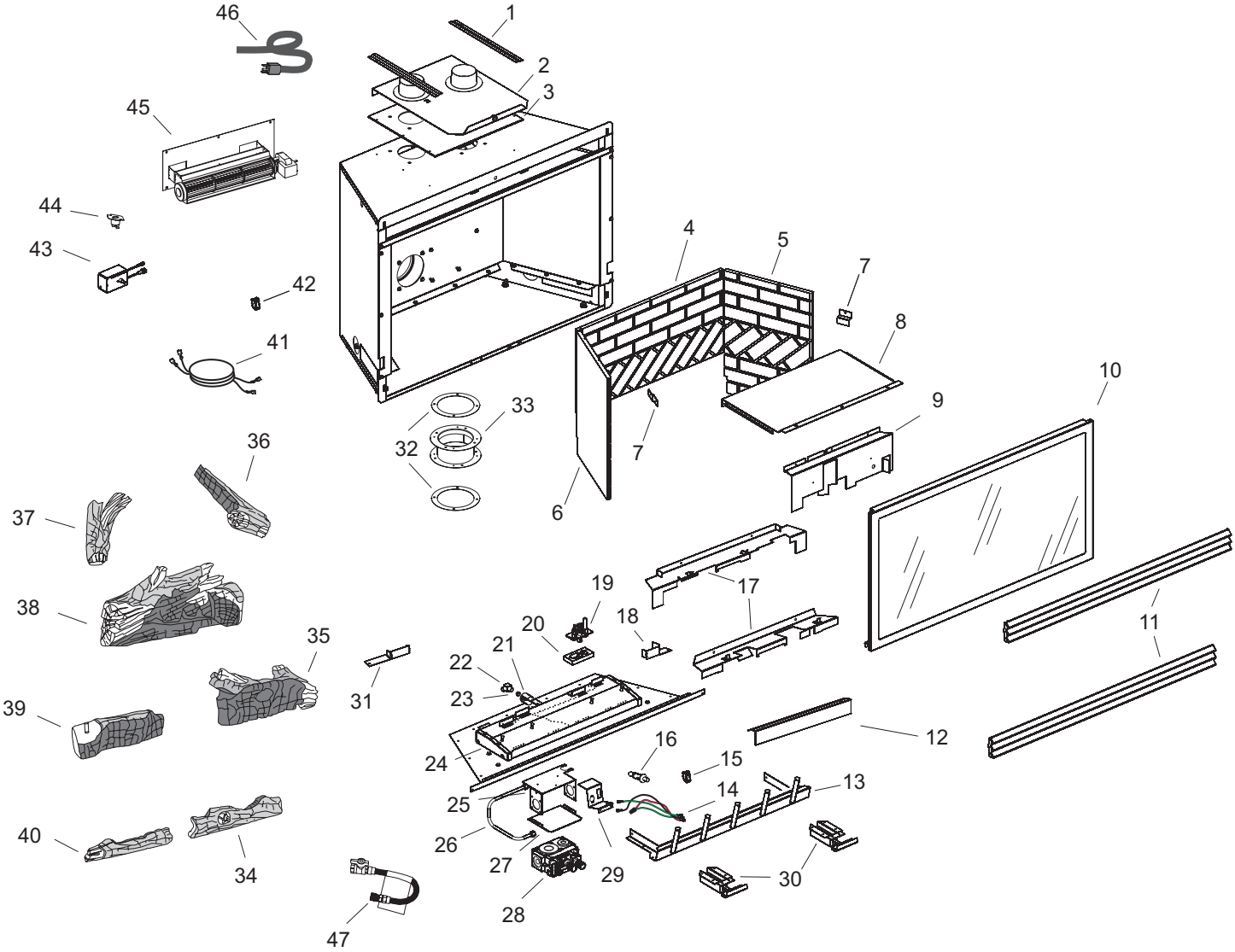

INSERT PARTS LIST

INDEX NO.	PART NUMBER DV25IN33L(N,P)	DV33IN33L(N,P)	DV35IN33L(N,P)	DESCRIPTION
1	22950	22950	22950	GUIDE, FLUE CONNECTOR
2	23309	23211	23211	VENT SLIDE PLATE ASSEMBLY
3	R9188	R9188	R9188	GASKET, TOP
4	R9192	R9196	R9199	BRICK PANEL, BACK
5	R9195	R9198	R9201	BRICK PANEL, RIGHT
6	R9194	R9197	R9200	BRICK PANEL, LEFT
7	20448	20448	20448	BRICK LINER BRACKET
8	22951	22972	22972	FIREBOX BAFFLE
9	22958	22976	22990	LOG SHELF
10	23303	23006	23320	GLASS DOOR & FRAME ASSEMBLY
11	23329	17169	17127	LOUVER ASSEMBLY
12	23158	23160	23160	LOG SUPPORT, FRONT
13	23315	23024	23024	GRATE TANG / BRACKET ASSEMBLY
14	R3435	R3435	R3435	WIRE ASSEMBLY
15	R3436	R3436	R3436	SWITCH, REMOTE/OFF/ON
16	R2708	R2708	R2708	IGNITER, PIEZO
17	23159	23161	23504	LOG SUPPORT, REAR
18	23521	23521	23521	FLAME SHIELD, RIGHT
19a	R7612	R7612	R7612	PILOT ASSEMBLY, SIT (NAT)
19b	R7611	R7611	R7611	PILOT ASSEMBLY, SIT (LP)
20	R9189	R9189	R9189	GASKET, PILOT
21	R5676	R5676	R5676	AIR SHUTTER
22	P253	P253	P253	FITTING, ORIFICE ANGLED
23a	P286	P270	P244	ORIFICE, MAIN BURNER (NAT)
23b	P214	P250	P210	ORIFICE, MAIN BURNER (LP)
24	23311	23017	23017	BURNER ASSEMBLY
25	22959	22959	22959	VALVE BRACKET
26	22739	22738	22738	TUBING ASSEMBLY
27	22973	22973	22973	SHIELD, VALVE
28a	R7577	R7577	R7577	VALVE, SIT GAS (NAT)
28b	R7578	R7578	R7578	VALVE, SIT GAS (LP)
29	22953	22953	22953	PIEZO BRACKET
30	16223	16223	16223	SPRING RETAINER ASSEMBLY
31	N/A	23690	23690	FLAME SHIELD, LEFT
32	M163	M163	M163	GASKET, FLUE CONNECTOR
33	23009	23009	23009	FLUE CONNECTOR ASSEMBLY
34	R9257	R9219	R9219	LOG, RIGHT FRONT
35	R9258	R9220	R9220	LOG, RIGHT CENTER
36	R9260	R9252	R9252	TWIG, RIGHT
37	R9261	R9253	R9253	TWIG, LEFT
38	R9255	R9217	R9217	LOG, BACK
39	R9259	R9251	R9251	LOG, LEFT CENTER
40	R9256	R9218	R9218	LOG, LEFT FRONT
41	R9268	R9268	R9268	WIRE ASSEMBLY - SWITCH
42	R2522	R2522	R2522	SWITCH, ON / OFF
43	18879	18879	18879	RHEOSTAT ASSEMBLY (SPEED CONTROL)
44	R7649	R7649	R7649	CONTROL, FAN
45	24925	24925	24925	BLOWER SUB-ASSEMBLY (W/MOUNTING PLATE, PAD)
46	R2204	R2204	R2204	CORD SET
47	R7591	R7591	R7591	FLEXLINE W/SHUTOFF VALVE

USE ONLY MANUFACTURER'S REPLACEMENT PARTS. USE OF ANY OTHER PARTS COULD CAUSE INJURY OR DEATH.

HOW TO ORDER REPAIR PARTS

Parts can be ordered **only** through your **service person or dealer**. For best results, the **service person or dealer** should order parts through the distributor. Parts can be shipped directly to the **service person/dealer.**

All parts listed in the Parts List have a Part Number. When ordering parts, first obtain the Model Number from the name plate on your equipment. Then determine the Part Number (**not** the Index Number) and the Description of each part from the following appropriate illustration and list. Be sure to give all this information .

Fireplace Number _____ Part Description _____

Fireplace Serial Number _____ Part Number _____

Type of Gas (Propane or Natural) _____

Do not order bolts, screws, washers or nuts. They are standard hardware items and can be purchased at any local hardware store.

Shipments contingent upon strikes, fires and all causes beyond our control.

SERVICE NOTES

SERVICE NOTES

Empire Comfort Systems Inc.
918 Freeburg Ave. Belleville, IL 62220

If you have a general question about our products, please e-mail us at info@empirecomfort.com.
If you have a service or repair question, please contact your dealer.

www.empirecomfort.com